WILLAMSON POND, WHANGAMATA WETLAND DESIGN

PREPARED FOR THAMES COROMANDEL DC



DWG. NO.	DRAWING TITLE	REV.
01	OVERALL PLAN VIEW	3
02	EXISTING PLAN-CONTOURS	3
03	PROPOSED PLAN-CONTOURS	3
04	CUT AND FILL DIAGRAM	3
05	EXISTING AND PROPOSED GROUND MODEL	3
06	DETAILS	3
07	BYPASS WEIR	3
08	CASCADE SEPARATOR	3
09	RIPRAP	3
10	WETLAND OUTLET DETAIL	3
11	WINGWALL AND SAFETY GRILL	3
12	COVER SLAB	3
13	BOLLARD	3
14	STORMWATER LONG SECTION - EXISTING 1	3
15	STORMWATER LONG SECTION - EXISTING 2	3
16	STORMWATER LONG SECTION - PROPOSED 1	3
17	STORMWATER LONG SECTION - PROPOSED 2	3
18	WETLAND LONG SECTION	3
19	PLANTING PLAN	3

ISSUED FOR TENDER

DATE: 15 APRIL 2024

METIS CONSULTANTS 2 MORGAN STREET, AUCKLAND

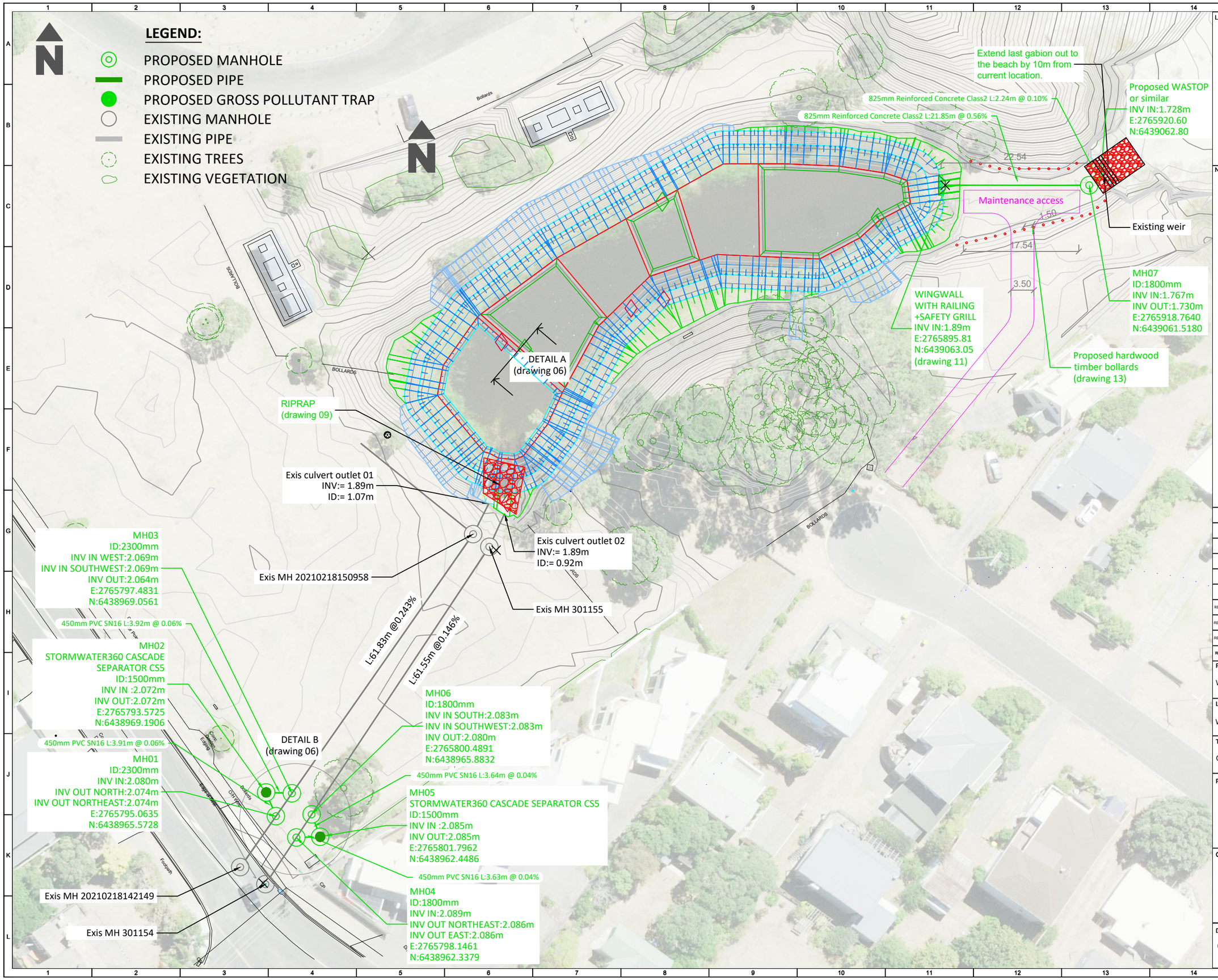

Legend



Notes:

1. All existing services shown are indicative only. The contractor is responsible for:
   - Confirming location and invert levels.
   - Exposing pipelines and services on site prior to commencing excavating works.
   - Drilling pile holes or driving piles to ensure the required clearances to services are achieved.

   Any discrepancies from issued plans should be notified to all parties immediately.
2. The contractor is responsible for protecting all existing services during construction. If damage occurs, the contractor shall reinstate the service at their own cost.
3. All services are to be located and flagged prior to commencing work on site.
4. Where new drainage pipes are shown to connect into existing, the contractor shall pothole and survey the top and the bottom of the pipe and confirm design levels with the engineer prior to construction.
5. Variations or discrepancies are to be referred to Metis Consultants for resolution prior to commencement.
6. The contractor shall carry out quality assurance testing as required by issued specifications and provide these progressively throughout the work and prior to completion.
7. Appropriate erosion and sediment control measures must be undertaken prior to any works commencing. These must be in accordance with local council requirements.
8. All works are to be conducted in line with TCDC Engineering Standards 2013.
9. All dimensions are in metres unless otherwise indicated.
10. Levels are in terms of NZVD2016.
11. Coordinates are in terms of NTZM projection NZGD2000.

Rev	Date	Purpose / Description	Drawn	Checked	Approved	Authorised
REV 3	15/04/24	DETAILED DESIGN FOR TENDER	LEO IVANOV	ANJANA KRISHNAN	MICHAEL ARTHUR	MICHAEL ARTHUR
REV 2	27/03/24	DETAILED DESIGN FOR TCDC REVIEW	LEO IVANOV	ANJANA KRISHNAN	MICHAEL ARTHUR	MICHAEL ARTHUR
REV 1	01/12/23	CONCEPT DESIGN FOR CLIENT REVIEW	HESHAN ATTANAYA	ANJANA KRISHNAN	ROPRU RANGSIVEK	MICHAEL ARTHUR

Project
WHANGAMATA STORMWATER IMPROVEMENTS

Location
WILLIAMSON ROAD / OCEAN ROAD

Title
OVERALL PLAN VIEW

Prepared by:
METIS

Client:
THAMES COROMANDEL DISTRICT COUNCIL

Drawing Number
01

Rev.
03



Legend



Notes:

1. All existing services shown are indicative only. The contractor is responsible for:
   - Confirming location and invert levels.
   - Exposing pipelines and services on site prior to commencing excavating works.
   - Drilling pile holes or driving piles to ensure the required clearances to services are achieved.

   Any discrepancies from issued plans should be notified to all parties immediately.
2. The contractor is responsible for protecting all existing services during construction. If damage occurs, the contractor shall reinstate the service at their own cost.
3. All services are to be located and flagged prior to commencing work on site.
4. Where new drainage pipes are shown to connect into existing, the contractor shall pothole and survey the top and the bottom of the pipe and confirm design levels with the engineer prior to construction.
5. Variations or discrepancies are to be referred to Metis Consultants for resolution prior to commencement.
6. The contractor shall carry out quality assurance testing as required by issued specifications and provide these progressively throughout the work and prior to completion.
7. Appropriate erosion and sediment control measures must be undertaken prior to any works commencing. These must be in accordance with local council requirements.
8. All works are to be conducted in line with TCDC Engineering Standards 2013.
9. All dimensions are in metres unless otherwise indicated.
10. Levels are in terms of NZVD2016.
11. Coordinates are in terms of NTZM projection NZGD2000.

Rev	Date	Purpose / Description	Drawn	Checked	Approved	Authorised
REV 3	15/04/24	DETAILED DESIGN FOR TENDER	LEO IVANOV	ANJANA KRISHNAN	MICHAEL ARTHUR	MICHAEL ARTHUR
REV 2	27/03/24	DETAILED DESIGN FOR TCDC REVIEW	LEO IVANOV	ANJANA KRISHNAN	MICHAEL ARTHUR	MICHAEL ARTHUR
REV 1	01/12/23	CONCEPT DESIGN FOR CLIENT REVIEW	HESHAN ATTANAYA	ANJANA KRISHNAN	ROPRU RANGSIVEK	MICHAEL ARTHUR

Project

WHANGAMATA STORMWATER IMPROVEMENTS

Location

WILLIAMSON ROAD / OCEAN ROAD

Title

EXISTING PLAN-CONTOURS

Prepared by:

METIS

Client:

THAMES COROMANDEL DISTRICT COUNCIL

Drawing Number	Rev.
02	03

EXISTING CONTOURS

PROPOSED CONTOURS

1:3

1:8, L=3m

1.39m

1.69m

Legend



Notes:

1. All existing services shown are indicative only. The contractor is responsible for:
   - Confirming location and invert levels.
   - Exposing pipelines and services on site prior to commencing excavating works.
   - Drilling pile holes or driving piles to ensure the required clearances to services are achieved.

   Any discrepancies from issued plans should be notified to all parties immediately.
2. The contractor is responsible for protecting all existing services during construction. If damage occurs, the contractor shall reinstate the service at their own cost.
3. All services are to be located and flagged prior to commencing work on site.
4. Where new drainage pipes are shown to connect into existing, the contractor shall pothole and survey the top and the bottom of the pipe and confirm design levels with the engineer prior to construction.
5. Variations or discrepancies are to be referred to Metis Consultants for resolution prior to commencement.
6. The contractor shall carry out quality assurance testing as required by issued specifications and provide these progressively throughout the work and prior to completion.
7. Appropriate erosion and sediment control measures must be undertaken prior to any works commencing. These must be in accordance with local council requirements.
8. All works are to be conducted in line with TCDC Engineering Standards 2013.
9. All dimensions are in metres unless otherwise indicated.
10. Levels are in terms of NZVD2016.
11. Coordinates are in terms of NTZM projection NZGD2000.

Rev	Date	Purpose / Description	Drawn	Checked	Approved	Authorised
REV 3	15/04/24	DETAILED DESIGN FOR TENDER	LEO IVANOV	ANJANA KRISHNAN	MICHAEL ARTHUR	MICHAEL ARTHUR
REV 2	27/03/24	DETAILED DESIGN FOR TCDC REVIEW	LEO IVANOV	ANJANA KRISHNAN	MICHAEL ARTHUR	MICHAEL ARTHUR
REV 1	01/12/23	CONCEPT DESIGN FOR CLIENT REVIEW	HESHAN ATTANAYA	ANJANA KRISHNAN	ROPRU RANGSIVEK	MICHAEL ARTHUR

Project

WHANGAMATA STORMWATER IMPROVEMENTS

Location

WILLIAMSON ROAD / OCEAN ROAD

Title

PROPOSED PLAN-CONTOURS

Prepared by:

METIS

Client:

THAMES COROMANDEL DISTRICT COUNCIL

Drawing Number: 03

Rev.: 03

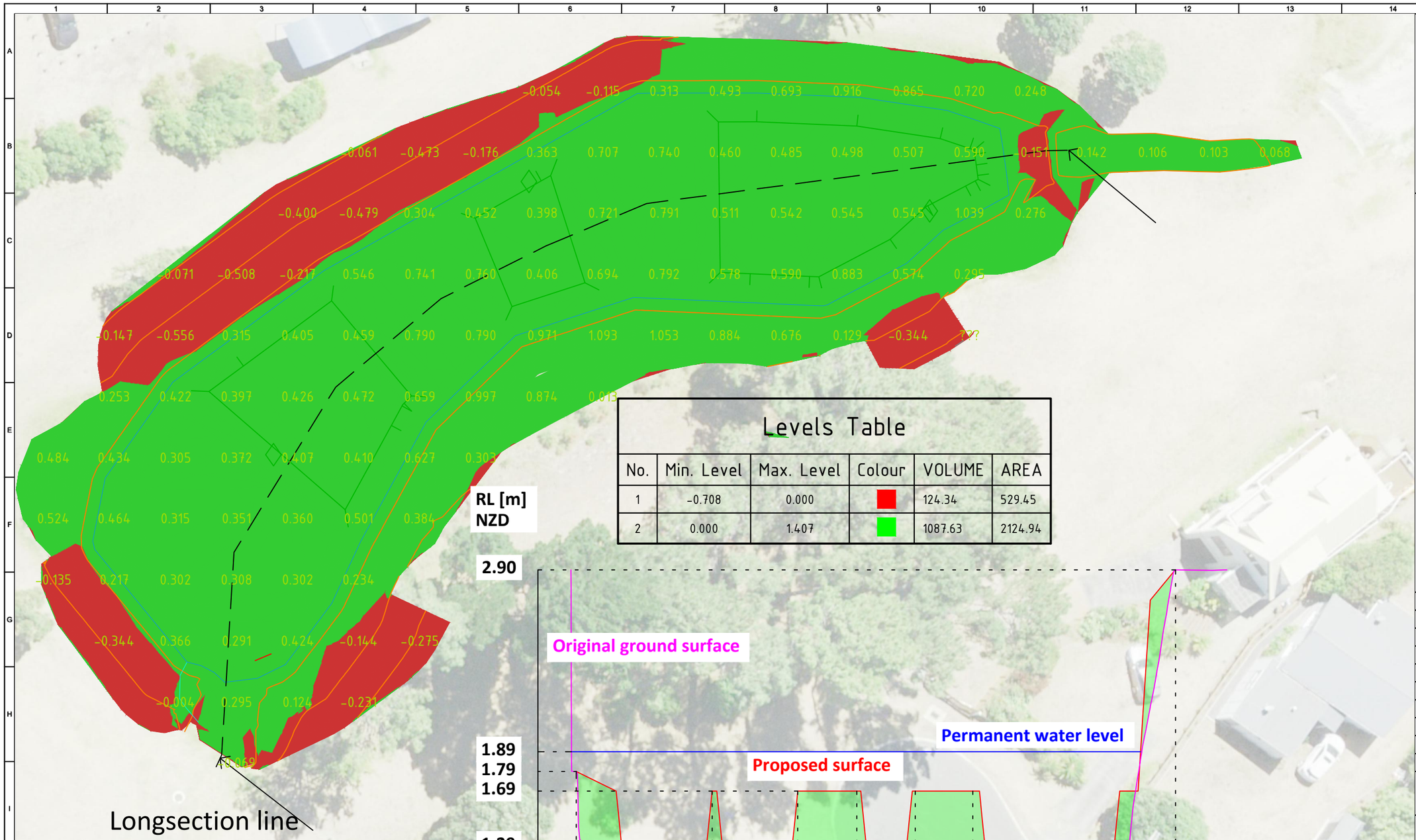

Levels Table

No.	Min. Level	Max. Level	Colour	VOLUME	AREA
1	-0.708	0.000		124.34	529.45
2	0.000	1.407		1087.63	2124.94

Legend



Notes:

1. All existing services shown are indicative only. The contractor is responsible for:
   - Confirming location and invert levels.
   - Exposing pipelines and services on site prior to commencing excavating works.
   - Drilling pile holes or driving piles to ensure the required clearances to services are achieved.

   Any discrepancies from issued plans should be notified to all parties immediately.
2. The contractor is responsible for protecting all existing services during construction. If damage occurs, the contractor shall reinstate the service at their own cost.
3. All services are to be located and flagged prior to commencing work on site.
4. Where new drainage pipes are shown to connect into existing, the contractor shall pothole and survey the top and the bottom of the pipe and confirm design levels with the engineer prior to construction.
5. Variations or discrepancies are to be referred to Metis Consultants for resolution prior to commencement.
6. The contractor shall carry out quality assurance testing as required by issued specifications and provide these progressively throughout the work and prior to completion.
7. Appropriate erosion and sediment control measures must be undertaken prior to any works commencing. These must be in accordance with local council requirements.
8. All works are to be conducted in line with TCDC Engineering Standards 2013.
9. All dimensions are in metres unless otherwise indicated.
10. Levels are in terms of NZVD2016.
11. Coordinates are in terms of NTZM projection NZGD2000.

Rev	Date	Purpose / Description	Drawn	Checked	Approved	Authorised
REV 3	15/04/24	DETAILED DESIGN FOR TENDER	LEO IVANOV	ANJANA KRISHNAN	MICHAEL ARTHUR	MICHAEL ARTHUR
REV 2	27/03/24	DETAILED DESIGN FOR TCDC REVIEW	LEO IVANOV	ANJANA KRISHNAN	MICHAEL ARTHUR	MICHAEL ARTHUR
REV 1	01/12/23	CONCEPT DESIGN FOR CLIENT REVIEW	HESHAN ATTANAYA	ANJANA KRISHNAN	ROPRU RANGSIVEK	MICHAEL ARTHUR

Project
WHANGAMATA STORMWATER IMPROVEMENTS

Location
WILLIAMSON ROAD / OCEAN ROAD

Title
CUT AND FILL DIAGRAM

Prepared by:
METIS

Client:
THAMES COROMANDEL DISTRICT COUNCIL

Drawing Number
04

Rev.
03

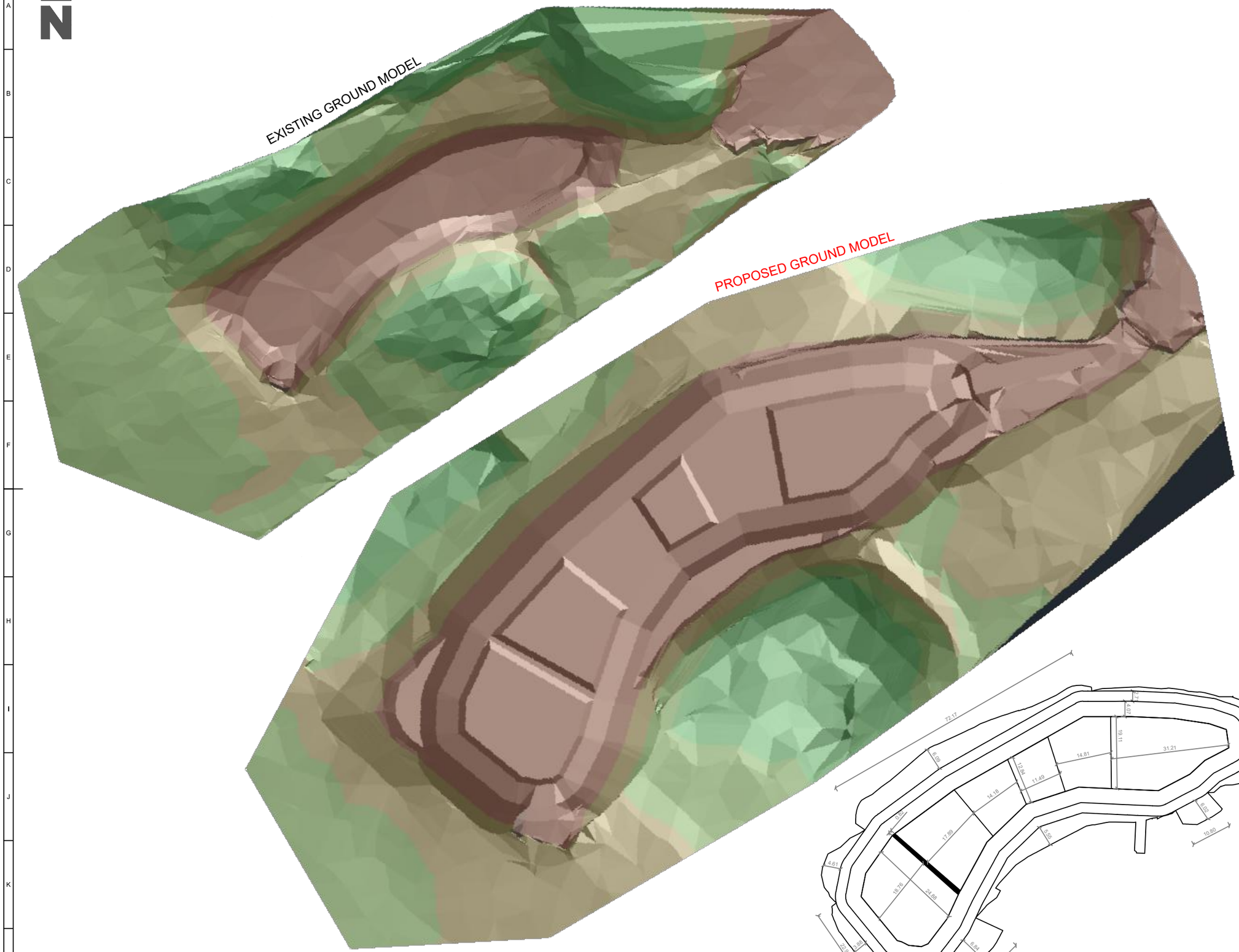

Legend



Notes:

1. All existing services shown are indicative only. The contractor is responsible for:
   - Confirming location and invert levels.
   - Exposing pipelines and services on site prior to commencing excavating works.
   - Drilling pile holes or driving piles to ensure the required clearances to services are achieved.

   Any discrepancies from issued plans should be notified to all parties immediately.
2. The contractor is responsible for protecting all existing services during construction. If damage occurs, the contractor shall reinstate the service at their own cost.
3. All services are to be located and flagged prior to commencing work on site.
4. Where new drainage pipes are shown to connect into existing, the contractor shall pothole and survey the top and the bottom of the pipe and confirm design levels with the engineer prior to construction.
5. Variations or discrepancies are to be referred to Metis Consultants for resolution prior to commencement.
6. The contractor shall carry out quality assurance testing as required by issued specifications and provide these progressively throughout the work and prior to completion.
7. Appropriate erosion and sediment control measures must be undertaken prior to any works commencing. These must be in accordance with local council requirements.
8. All works are to be conducted in line with TCDC Engineering Standards 2013.
9. All dimensions are in metres unless otherwise indicated.
10. Levels are in terms of NZVD2016.
11. Coordinates are in terms of NTZM projection NZGD2000.

Rev	Date	Purpose / Description			
		Drawn	Checked	Approved	Authorised
REV 3	15/04/24	DETAILED DESIGN FOR TENDER			
		LEO IVANOV	ANJANA KRISHNAN	MICHAEL ARTHUR	MICHAEL ARTHUR
REV 2	27/03/24	DETAILED DESIGN FOR TCDC REVIEW			
		LEO IVANOV	ANJANA KRISHNAN	MICHAEL ARTHUR	MICHAEL ARTHUR
REV 1	01/12/23	CONCEPT DESIGN FOR CLIENT REVIEW			
		HESHAN ATTANAYA	ANJANA KRISHNAN	ROPRU RANGSIVEK	MICHAEL ARTHUR

Project

WHANGAMATA STORMWATER IMPROVEMENTS

Location

WILLIAMSON ROAD / OCEAN ROAD

Title

EXISTING AND PROPOSED GROUND MODEL

Prepared by:

METIS

Client:

THAMES COROMANDEL DISTRICT COUNCIL

Drawing Number: 05

Rev.: 03

DETAIL A:

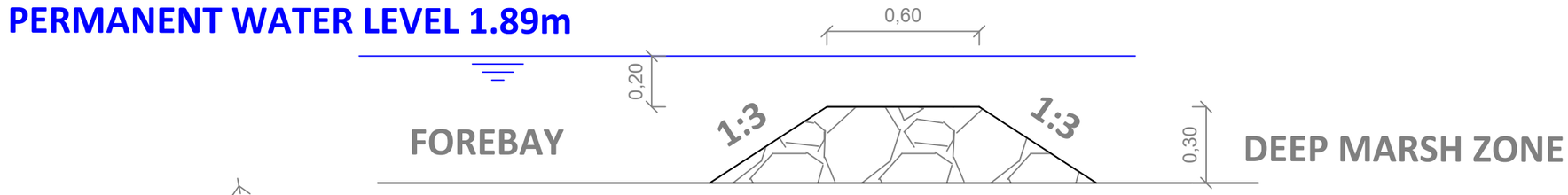

DETAIL B:

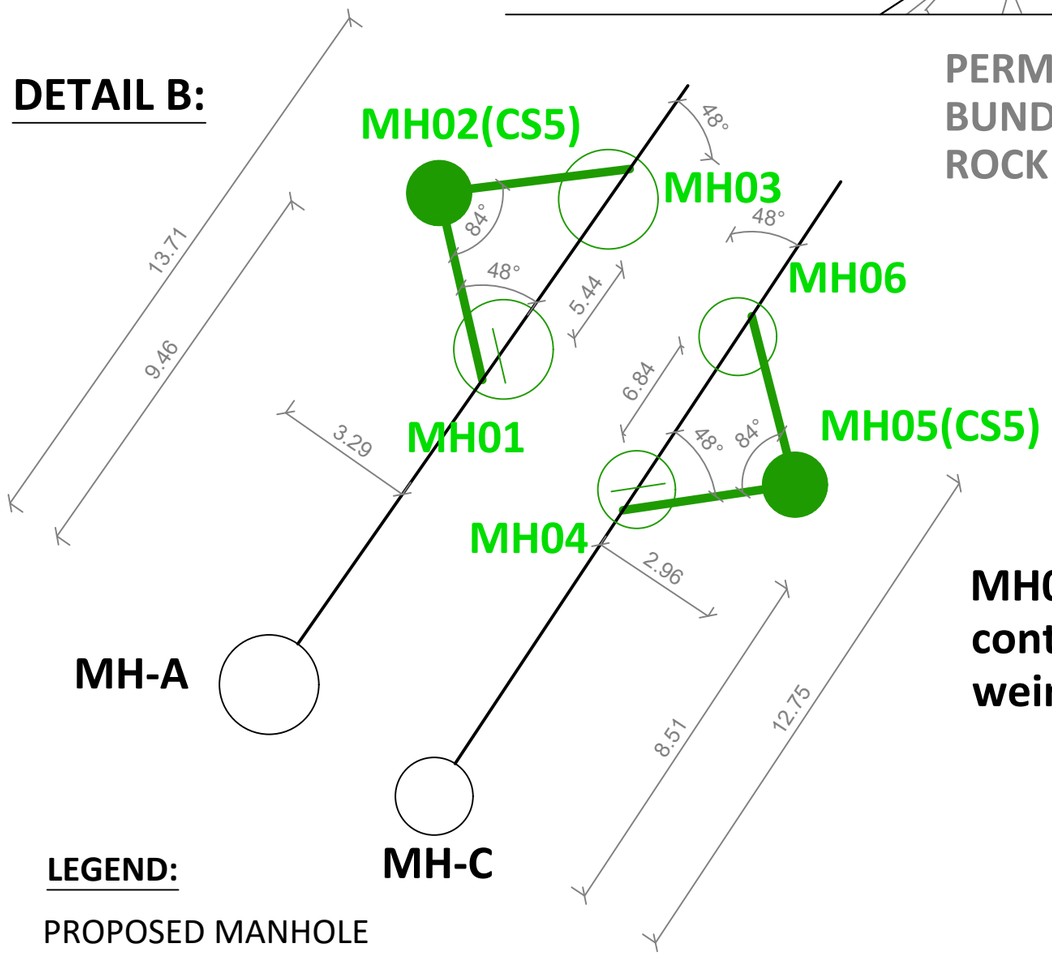

MH01 and MH04 contain a bypass weir (drawing 07)

LEGEND:

- PROPOSED MANHOLE
- PROPOSED PIPE LONG SECTION (drawing 12)
- PROPOSED GROSS POLLUTANT TRAP
- EXISTING MANHOLE
- EXISTING PIPE LONG SECTION (drawing 10 and 11)

Legend



Notes:

1. All existing services shown are indicative only. The contractor is responsible for:
   - Confirming location and invert levels.
   - Exposing pipelines and services on site prior to commencing excavating works.
   - Drilling pile holes or driving piles to ensure the required clearances to services are achieved.

   Any discrepancies from issued plans should be notified to all parties immediately.
2. The contractor is responsible for protecting all existing services during construction. If damage occurs, the contractor shall reinstate the service at their own cost.
3. All services are to be located and flagged prior to commencing work on site.
4. Where new drainage pipes are shown to connect into existing, the contractor shall pothole and survey the top and the bottom of the pipe and confirm design levels with the engineer prior to construction.
5. Variations or discrepancies are to be referred to Metis Consultants for resolution prior to commencement.
6. The contractor shall carry out quality assurance testing as required by issued specifications and provide these progressively throughout the work and prior to completion.
7. Appropriate erosion and sediment control measures must be undertaken prior to any works commencing. These must be in accordance with local council requirements.
8. All works are to be conducted in line with TCDC Engineering Standards 2013.
9. All dimensions are in metres unless otherwise indicated.
10. Levels are in terms of NZVD2016.
11. Coordinates are in terms of NTZM projection NZGD2000.

Rev	Date	Purpose / Description	Drawn	Checked	Approved	Authorised
REV 3	15/04/24	DETAILED DESIGN FOR TENDER	LEO IVANOV	ANJANA KRISHNAN	MICHAEL ARTHUR	MICHAEL ARTHUR
REV 2	27/03/24	DETAILED DESIGN FOR TCDC REVIEW	LEO IVANOV	ANJANA KRISHNAN	MICHAEL ARTHUR	MICHAEL ARTHUR
REV 1	01/12/23	CONCEPT DESIGN FOR CLIENT REVIEW	HESHAN ATTANAYA	ANJANA KRISHNAN	ROPRU RANGSIVEK	MICHAEL ARTHUR

Project
WHANGAMATA STORMWATER IMPROVEMENTS

Location
WILLIAMSON ROAD / OCEAN ROAD

Title
DETAILS

Prepared by:
METIS

Client:
THAMES COROMANDEL DISTRICT COUNCIL

Drawing Number: 06
Rev.: 03

Pen Table : METIS_A3 PLOT STYLE
Published by : leo ivanov
at : 4/16/2024 10:57 am
File name: WILLAMSON POND
A 3

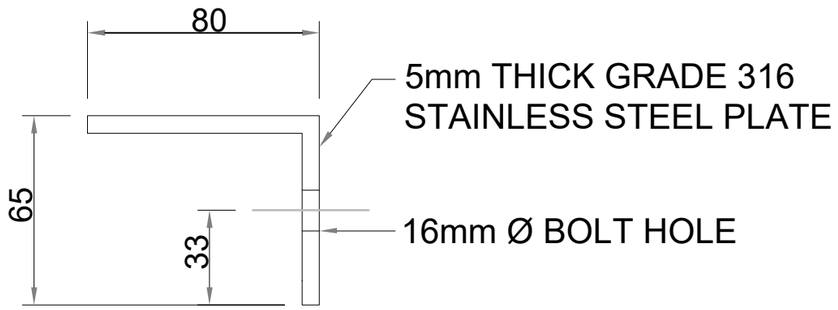

BYPASS WEIR TAB

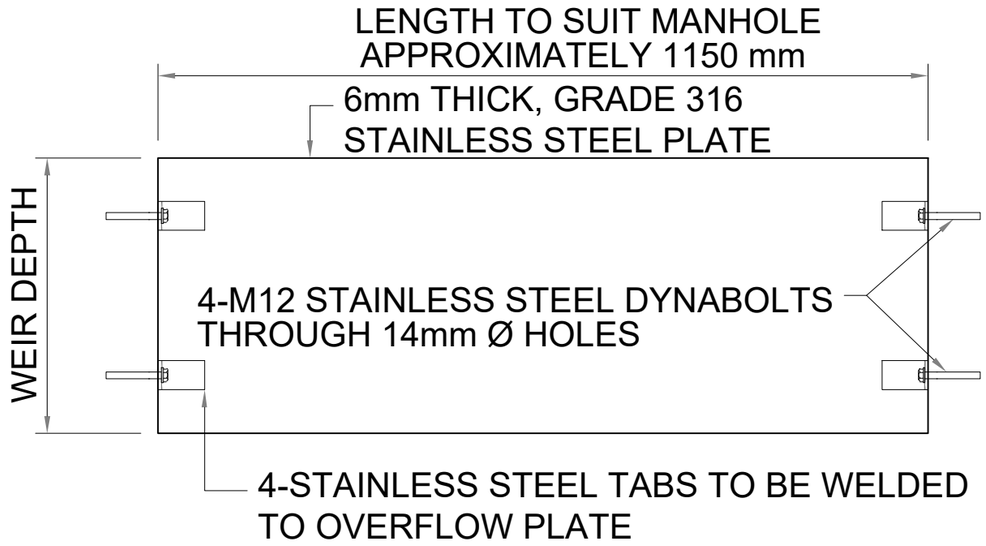

BYPASS WEIR

MH01 and MH04 BYPASS WEIR
FIX TO MANHOLE WALL WITH 4-M12 SS DYNABOLTS 70mm LONG BED ON SIKADUR 31 MORTAR BEDDING. WEIR POSITIONING IN MANHOLE TO BE APPROVED BY THE ENGINEER PRIOR TO FABRICATION AND INSTALLATION.

Legend



Notes:

1. All existing services shown are indicative only. The contractor is responsible for:
   - Confirming location and invert levels.
   - Exposing pipelines and services on site prior to commencing excavating works.
   - Drilling pile holes or driving piles to ensure the required clearances to services are achieved.

   Any discrepancies from issued plans should be notified to all parties immediately.
2. The contractor is responsible for protecting all existing services during construction. If damage occurs, the contractor shall reinstate the service at their own cost.
3. All services are to be located and flagged prior to commencing work on site.
4. Where new drainage pipes are shown to connect into existing, the contractor shall pothole and survey the top and the bottom of the pipe and confirm design levels with the engineer prior to construction.
5. Variations or discrepancies are to be referred to Metis Consultants for resolution prior to commencement.
6. The contractor shall carry out quality assurance testing as required by issued specifications and provide these progressively throughout the work and prior to completion.
7. Appropriate erosion and sediment control measures must be undertaken prior to any works commencing. These must be in accordance with local council requirements.
8. All works are to be conducted in line with TCDC Engineering Standards 2013.
9. All dimensions are in metres unless otherwise indicated.
10. Levels are in terms of NZVD2016.
11. Coordinates are in terms of NTZM projection NZGD2000.

Rev	Date	Purpose / Description	Drawn	Checked	Approved	Authorised
REV 3	15/04/24	DETAILED DESIGN FOR TENDER	LEO IVANOV	ANJANA KRISHNAN	MICHAEL ARTHUR	MICHAEL ARTHUR
REV 2	27/03/24	DETAILED DESIGN FOR TCDC REVIEW	LEO IVANOV	ANJANA KRISHNAN	MICHAEL ARTHUR	MICHAEL ARTHUR
REV 1	01/12/23	CONCEPT DESIGN FOR CLIENT REVIEW	HESHAN ATTANAYA	ANJANA KRISHNAN	ROPRU RANGSIVEK	MICHAEL ARTHUR

Project
WHANGAMATA STORMWATER IMPROVEMENTS

Location
WILLIAMSON ROAD / OCEAN ROAD

Title
BYPASS WEIR

Prepared by:
METIS

Client:
THAMES COROMANDEL DISTRICT COUNCIL

Drawing Number	Rev.
07	03

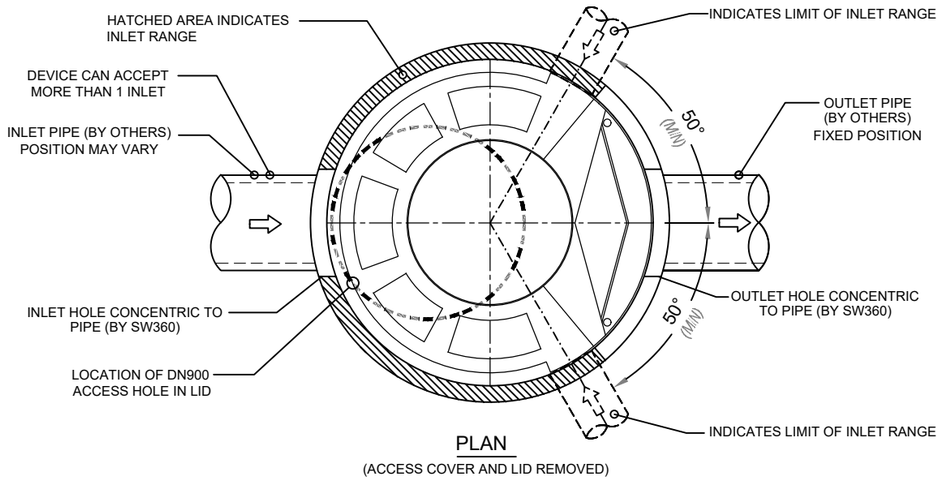

PLAN

(ACCESS COVER AND LID REMOVED)

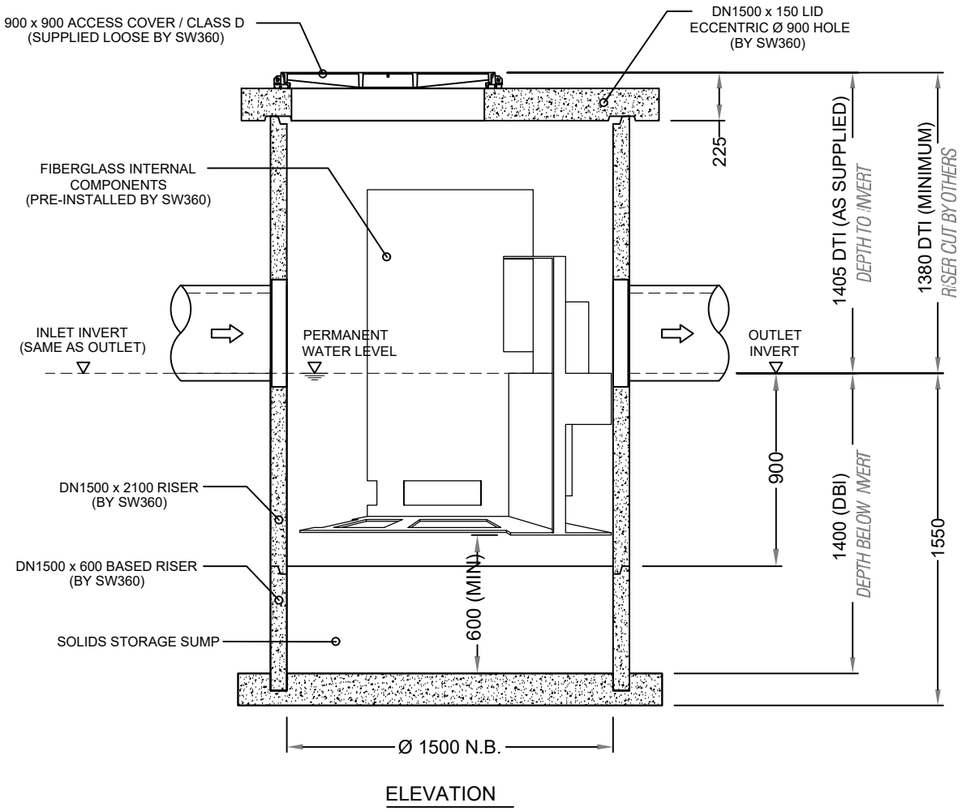

ELEVATION

TO BE COMPLETED BY CUSTOMER / CONTRACTOR			
COMPANY :			P.O. NUMBER :
SITE ADDRESS :			
SITE CONTACT & PHONE :			
PREFERRED DELIVERY DATE (TBC SW360) :			
FILTER REFERENCE (IF APPLICABLE) :			LID LEVEL (INPUT REQUIRED) :
INLET PIPE DATA: DN750 (max)	DIA :	IL :	MATERIAL :
OUTLET PIPE DATA: DN750 (max)	DIA :	IL :	MATERIAL :
INLET PIPE ORIENTATION :	AS DRAWN : Yes / No	IF NO THEN PLEASE: SKETCH ORIENTATION ON THE DRAWING	IF MULTIPLE INLETS ARE REQUIRED THEN PLEASE: SKETCH ADDITIONAL PIPES WITH ORIENTATIONS ON THE DRAWING
COMPLETED BY :		SIGNED :	DATE :

NOTES

1. MANHOLE COMPONENTS AND CONCRETE LID FITTED WITH SWIFTLIFT ANCHOR POINTS. SPREADER BAR RECOMMENDED FOR MANHOLE LIFTS.
2. UNIT SUPPLIED WITH INLET AND OUTLET HOLES CORE DRILLED.
3. SEALING / GROUTING OF MANHOLE COMPONENTS AND PIPES BY CONTRACTOR. ENSURING LOCAL CODES AND REGULATIONS ARE COMPLIED WITH.
4. ANY RISERS REQUIRED TO INCREASE THE DEPTH TO INVERT (DTI) FROM THAT AS DRAWN TO BE SUPPLIED BY THE CONTRACTOR.
5. FOR A DTI EXCEEDING 5m PLEASE CONTACT 0800STORMWATER.
6. CONTRACTOR TO TAKE APPROPRIATE MEASURES TO PROTECT DEVICE FROM CONSTRUCTION RELATED EROSION RUNOFF.
7. BACKFILL, BEDDING AND BUOYANCY DESIGN BY ENGINEER OF RECORD.
8. CONCRETE MANHOLE RISERS ARE DESIGNED AND MANUFACTURED IN ACCORDANCE WITH AS/NZS 4058 : 2007
9. CONCRETE MANHOLE BASES ARE DESIGNED AND MANUFACTURED IN ACCORDANCE WITH NZS 3101 : 2006 & NZS 3109 : 1997
10. CONCRETE LID DESIGNED AND MANUFACTURED TO HN-HO-72
11. FOR REQUIREMENTS OUTSIDE OF DRAWING SPECIFICATIONS PLEASE CONTACT 0800STORMWATER.

APPROX WEIGHTS

DN1500 X 600 MHB: 1675 Kg
DN1500 X 2100 RISER (INCL INSERT): 2100 Kg
DN1500 CONCRETE LID: 950 Kg

0800 STORMWATER
sales@stormwater360.co.nz
www.stormwater360.co.nz

CONDITION OF USE
© STORMWATER360 2019 Any unauthorised reproduction of this drawing in part or in full is prohibited

CASCADE SEPARATOR™
HYDRODYNAMIC SEPARATOR
DN1500 / CS-5
GENERAL ARRANGEMENT

SCALE : N.T.S. | DRG No : CS-MH-CS5-1500-T-20 | REV : 1 | DATE : 09.02.20

		REV	REVISION DETAIL	DATE
JOB NO :				
PROJECT :		1	REVISED	18.02.20
		0	APPROVED	09.02.20
DRN :	G.S. 21.01.20			
CKD :	K.J.09.02.20			

Legend



Notes:

1. All existing services shown are indicative only. The contractor is responsible for:
   - Confirming location and invert levels.
   - Exposing pipelines and services on site prior to commencing excavating works.
   - Drilling pile holes or driving piles to ensure the required clearances to services are achieved.

   Any discrepancies from issued plans should be notified to all parties immediately.
2. The contractor is responsible for protecting all existing services during construction. If damage occurs, the contractor shall reinstate the service at their own cost.
3. All services are to be located and flagged prior to commencing work on site.
4. Where new drainage pipes are shown to connect into existing, the contractor shall pothole and survey the top and the bottom of the pipe and confirm design levels with the engineer prior to construction.
5. Variations or discrepancies are to be referred to Metis Consultants for resolution prior to commencement.
6. The contractor shall carry out quality assurance testing as required by issued specifications and provide these progressively throughout the work and prior to completion.
7. Appropriate erosion and sediment control measures must be undertaken prior to any works commencing. These must be in accordance with local council requirements.
8. All works are to be conducted in line with TCDC Engineering Standards 2013.
9. All dimensions are in metres unless otherwise indicated.
10. Levels are in terms of NZVD2016.
11. Coordinates are in terms of NTZM projection NZGD2000.

Rev	Date	Purpose / Description	Drawn	Checked	Approved	Authorised
REV 3	15/04/24	DETAILED DESIGN FOR TENDER	LEO IVANOV	ANJANA KRISHNAN	MICHAEL ARTHUR	MICHAEL ARTHUR
REV 2	27/03/24	DETAILED DESIGN FOR TCDC REVIEW	LEO IVANOV	ANJANA KRISHNAN	MICHAEL ARTHUR	MICHAEL ARTHUR
REV 1	01/12/23	CONCEPT DESIGN FOR CLIENT REVIEW	HESHAN ATTANAYA	ANJANA KRISHNAN	ROPRU RANGSIVEK	MICHAEL ARTHUR

Project
WHANGAMATA STORMWATER IMPROVEMENTS

Location
WILLIAMSON ROAD / OCEAN ROAD

Title
CASCADE SEPARATOR

Prepared by:
METIS

Client:
THAMES COROMANDEL DISTRICT COUNCIL

Drawing Number: 08
Rev.: 03

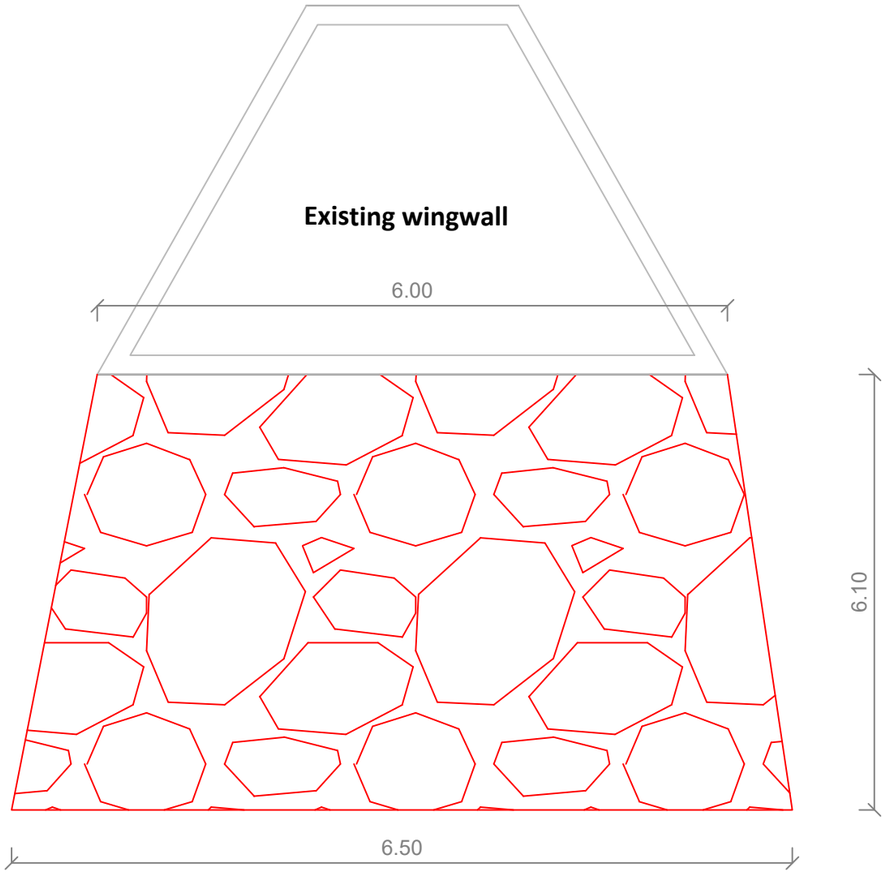

Proposed RIPRAP

- excavate bed material
- prepare bed and place heavy geotextile fabric, anchored per manufacturer
- place RIPRAP up side of bank to suit wetland geometry
- riprap diameter D50=0.25m

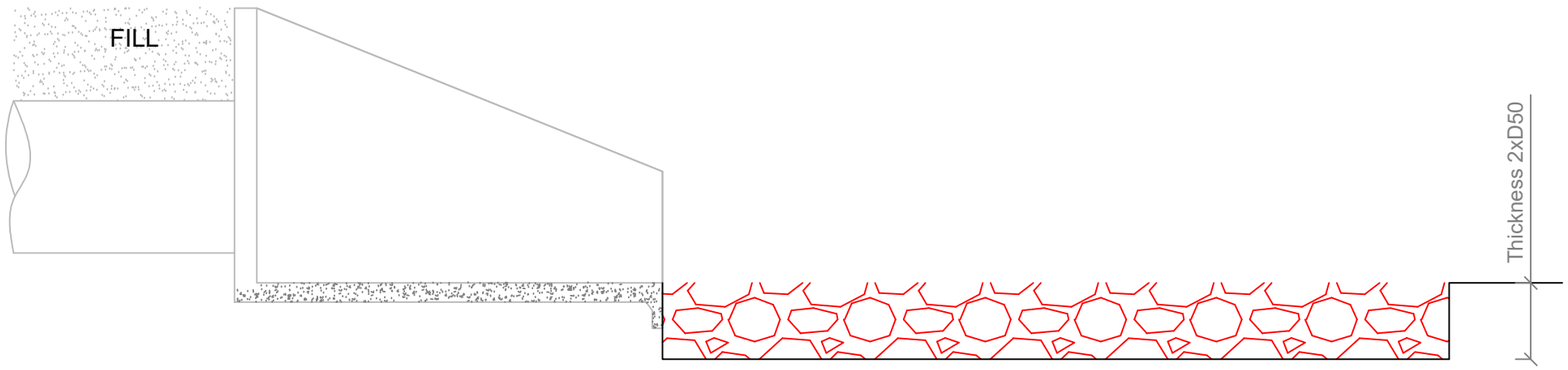

Legend



Notes:

1. All existing services shown are indicative only. The contractor is responsible for:
   - Confirming location and invert levels.
   - Exposing pipelines and services on site prior to commencing excavating works.
   - Drilling pile holes or driving piles to ensure the required clearances to services are achieved.

   Any discrepancies from issued plans should be notified to all parties immediately.
2. The contractor is responsible for protecting all existing services during construction. If damage occurs, the contractor shall reinstate the service at their own cost.
3. All services are to be located and flagged prior to commencing work on site.
4. Where new drainage pipes are shown to connect into existing, the contractor shall pothole and survey the top and the bottom of the pipe and confirm design levels with the engineer prior to construction.
5. Variations or discrepancies are to be referred to Metis Consultants for resolution prior to commencement.
6. The contractor shall carry out quality assurance testing as required by issued specifications and provide these progressively throughout the work and prior to completion.
7. Appropriate erosion and sediment control measures must be undertaken prior to any works commencing. These must be in accordance with local council requirements.
8. All works are to be conducted in line with TCDC Engineering Standards 2013.
9. All dimensions are in metres unless otherwise indicated.
10. Levels are in terms of NZVD2016.
11. Coordinates are in terms of NTZM projection NZGD2000.

Rev	Date	Purpose / Description			
		Drawn	Checked	Approved	Authorised
REV 3	15/04/24	DETAILED DESIGN FOR TENDER			
		LEO IVANOV	ANJANA KRISHNAN	MICHAEL ARTHUR	MICHAEL ARTHUR
REV 2	27/03/24	DETAILED DESIGN FOR TCDC REVIEW			
		LEO IVANOV	ANJANA KRISHNAN	MICHAEL ARTHUR	MICHAEL ARTHUR
REV 1	01/12/23	CONCEPT DESIGN FOR CLIENT REVIEW			
		HESHAN ATTANAYA	ANJANA KRISHNAN	ROPRU RANGSIVEK	MICHAEL ARTHUR

Project
WHANGAMATA STORMWATER IMPROVEMENTS

Location
WILLIAMSON ROAD / OCEAN ROAD

Title
RIPRAP

Prepared by:
METIS

Client:
THAMES COROMANDEL DISTRICT COUNCIL

Drawing Number 09

Rev. 03

WETLAND OUTLET LONGSECTION

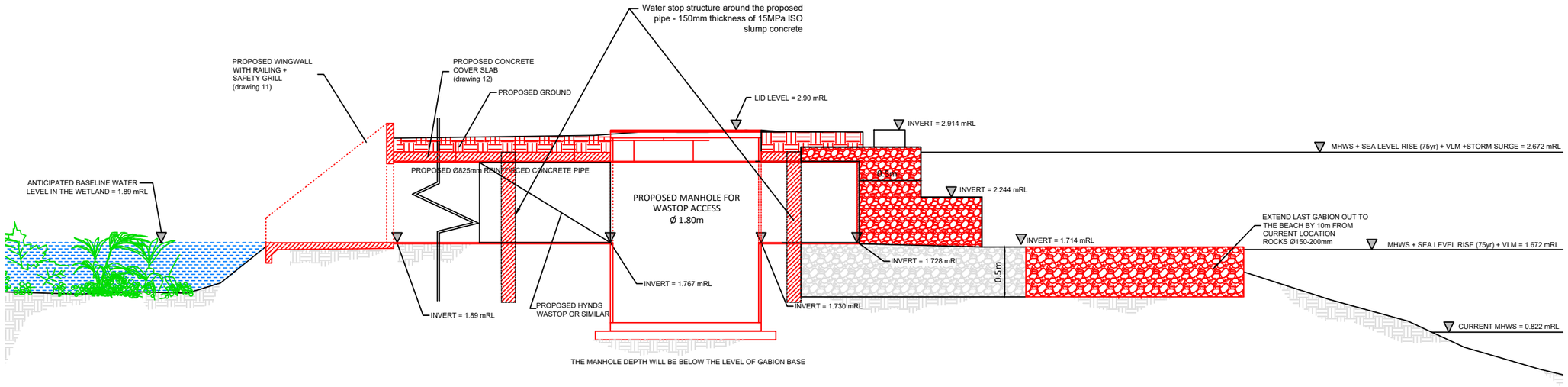

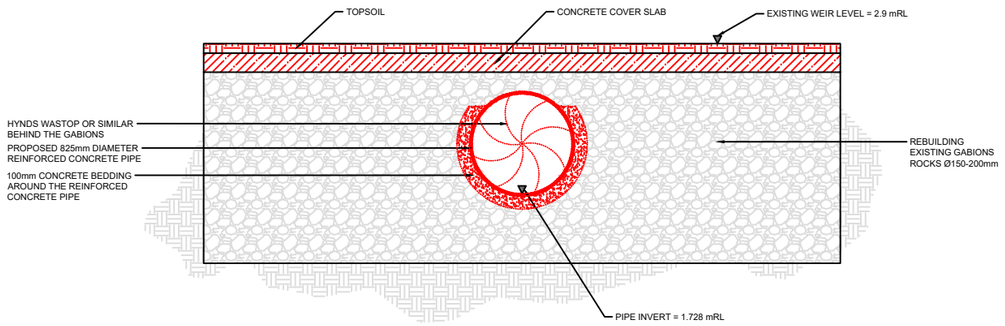

OUTLET PIPE BEDDING DETAILS
SCALE 1:70

Legend



Notes:

1. All existing services shown are indicative only. The contractor is responsible for:
   - Confirming location and invert levels.
   - Exposing pipelines and services on site prior to commencing excavating works.
   - Drilling pile holes or driving piles to ensure the required clearances to services are achieved.

   Any discrepancies from issued plans should be notified to all parties immediately.
2. The contractor is responsible for protecting all existing services during construction. If damage occurs, the contractor shall reinstate the service at their own cost.
3. All services are to be located and flagged prior to commencing work on site.
4. Where new drainage pipes are shown to connect into existing, the contractor shall pothole and survey the top and the bottom of the pipe and confirm design levels with the engineer prior to construction.
5. Variations or discrepancies are to be referred to Metis Consultants for resolution prior to commencement.
6. The contractor shall carry out quality assurance testing as required by issued specifications and provide these progressively throughout the work and prior to completion.
7. Appropriate erosion and sediment control measures must be undertaken prior to any works commencing. These must be in accordance with local council requirements.
8. All works are to be conducted in line with TCDC Engineering Standards 2013.
9. All dimensions are in metres unless otherwise indicated.
10. Levels are in terms of NZVD2016.
11. Coordinates are in terms of NTZM projection NZGD2000.

Rev	Date	Purpose / Description			
		Drawn	Checked	Approved	Authorised
REV 3	15/04/24	DETAILED DESIGN FOR TENDER			
		LEO IVANOV	ANJANA KRISHNAN	MICHAEL ARTHUR	MICHAEL ARTHUR
REV 2	27/03/24	DETAILED DESIGN FOR TCDC REVIEW			
		LEO IVANOV	ANJANA KRISHNAN	MICHAEL ARTHUR	MICHAEL ARTHUR
REV 1	01/12/23	CONCEPT DESIGN FOR CLIENT REVIEW			
		HESHAN ATTANAYA	ANJANA KRISHNAN	ROPRU RANGSIVEK	MICHAEL ARTHUR

Project

WHANGAMATA STORMWATER IMPROVEMENTS

Location

WILLIAMSON ROAD / OCEAN ROAD

Title

WETLAND OUTLET DETAIL

Prepared by:

METIS

Client:

THAMES COROMANDEL DISTRICT COUNCIL

Drawing Number: 10

Rev.: 03

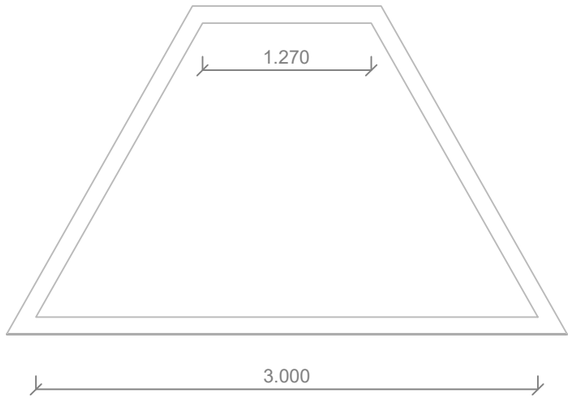

WINGWALL PLAN VIEW
NTS

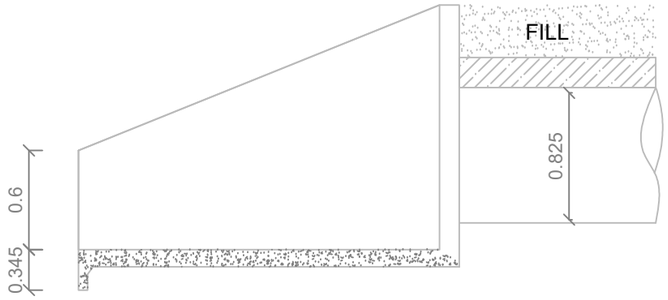

WINGWALL TYPICAL SECTION VIEW
NTS

Safety fence with the same dimensions as the one on the inlet structure of the wetland

Coated with galvanised steel
Bar spacing 100mm-120mm
Spacing under the grille is between 60-120mm

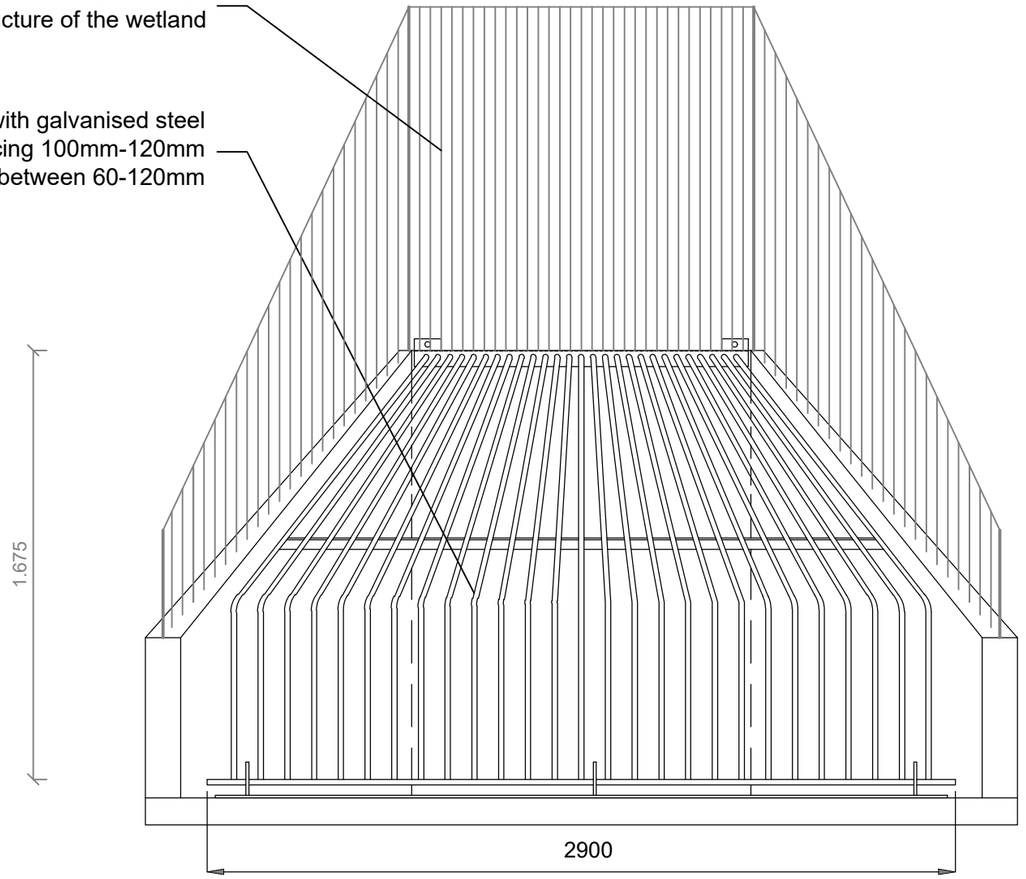

SAFETY GRILLE AND FENCING
FRONT ELEVATION
NTS

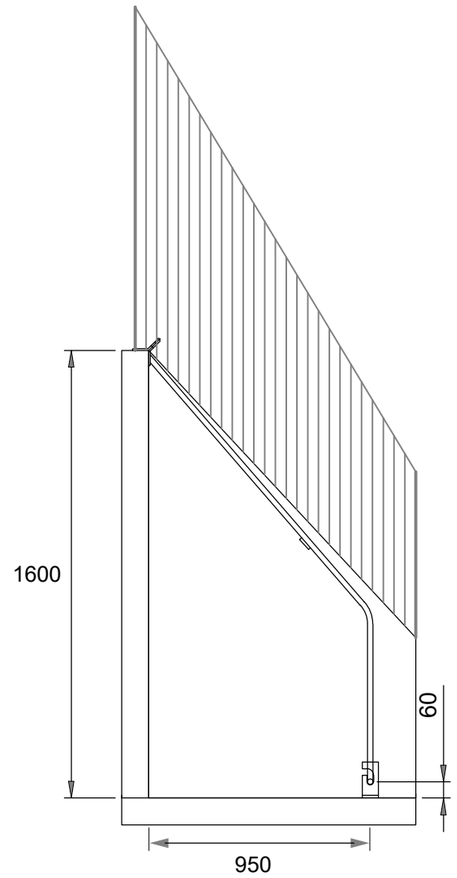

SIDE SECTIONAL
ELEVATION
NTS

Legend



Notes:

1. All existing services shown are indicative only. The contractor is responsible for:
   - Confirming location and invert levels.
   - Exposing pipelines and services on site prior to commencing excavating works.
   - Drilling pile holes or driving piles to ensure the required clearances to services are achieved.

   Any discrepancies from issued plans should be notified to all parties immediately.
2. The contractor is responsible for protecting all existing services during construction. If damage occurs, the contractor shall reinstate the service at their own cost.
3. All services are to be located and flagged prior to commencing work on site.
4. Where new drainage pipes are shown to connect into existing, the contractor shall pothole and survey the top and the bottom of the pipe and confirm design levels with the engineer prior to construction.
5. Variations or discrepancies are to be referred to Metis Consultants for resolution prior to commencement.
6. The contractor shall carry out quality assurance testing as required by issued specifications and provide these progressively throughout the work and prior to completion.
7. Appropriate erosion and sediment control measures must be undertaken prior to any works commencing. These must be in accordance with local council requirements.
8. All works are to be conducted in line with TCDC Engineering Standards 2013.
9. All dimensions are in metres unless otherwise indicated.
10. Levels are in terms of NZVD2016.
11. Coordinates are in terms of NTZM projection NZGD2000.

Rev	Date	Purpose / Description	Drawn	Checked	Approved	Authorised
REV 3	15/04/24	DETAILED DESIGN FOR TENDER	LEO IVANOV	ANJANA KRISHNAN	MICHAEL ARTHUR	MICHAEL ARTHUR
REV 2	27/03/24	DETAILED DESIGN FOR TCDC REVIEW	LEO IVANOV	ANJANA KRISHNAN	MICHAEL ARTHUR	MICHAEL ARTHUR
REV 1	01/12/23	CONCEPT DESIGN FOR CLIENT REVIEW	HESHAN ATTANAYA	ANJANA KRISHNAN	ROPRU RANGSIVEK	MICHAEL ARTHUR

Project
WHANGAMATA STORMWATER IMPROVEMENTS

Location
WILLIAMSON ROAD / OCEAN ROAD

Title
WINGWALL AND SAFETY GRILL

Prepared by:
METIS

Client:
THAMES COROMANDEL DISTRICT COUNCIL

Drawing Number
11

Rev.
03

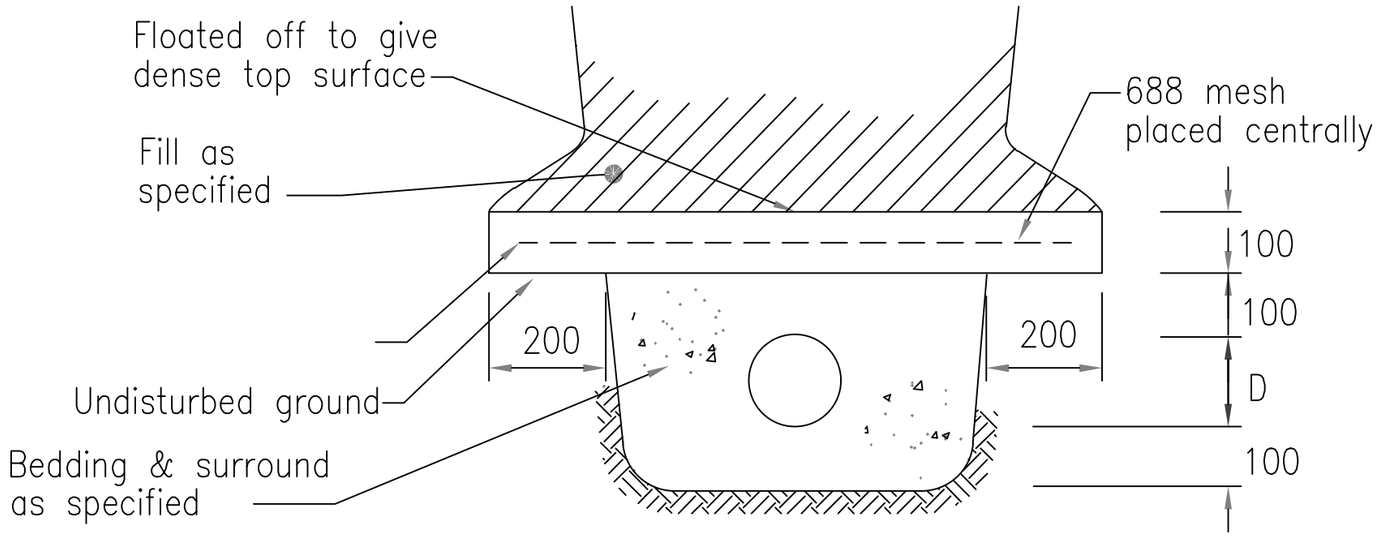

REINFORCED CONCRETE SLAB PROTECTION FOR STORMWATER AND WASTEWATER

(Where additional loading or other requirements necessitate)

GENERAL:

A. All concrete to be 20MPa at 28 days as per NZS 3104:2021

B. Cement stabilised bedding and back fill: 1 part cement to 20 parts aggregate.

C. Allow 48 hours curing prior to back filling any concrete or stabilised material.

Slab protection to be laid in lengths no greater than 2.0M

Legend



Notes:

1. All existing services shown are indicative only. The contractor is responsible for:
   - Confirming location and invert levels.
   - Exposing pipelines and services on site prior to commencing excavating works.
   - Drilling pile holes or driving piles to ensure the required clearances to services are achieved.

   Any discrepancies from issued plans should be notified to all parties immediately.
2. The contractor is responsible for protecting all existing services during construction. If damage occurs, the contractor shall reinstate the service at their own cost.
3. All services are to be located and flagged prior to commencing work on site.
4. Where new drainage pipes are shown to connect into existing, the contractor shall pothole and survey the top and the bottom of the pipe and confirm design levels with the engineer prior to construction.
5. Variations or discrepancies are to be referred to Metis Consultants for resolution prior to commencement.
6. The contractor shall carry out quality assurance testing as required by issued specifications and provide these progressively throughout the work and prior to completion.
7. Appropriate erosion and sediment control measures must be undertaken prior to any works commencing. These must be in accordance with local council requirements.
8. All works are to be conducted in line with TCDC Engineering Standards 2013.
9. All dimensions are in metres unless otherwise indicated.
10. Levels are in terms of NZVD2016.
11. Coordinates are in terms of NTZM projection NZGD2000.

Rev	Date	Purpose / Description	Drawn	Checked	Approved	Authorised
REV 3	15/04/24	DETAILED DESIGN FOR TENDER	LEO IVANOV	ANJANA KRISHNAN	MICHAEL ARTHUR	MICHAEL ARTHUR
REV 2	27/03/24	DETAILED DESIGN FOR TCDC REVIEW	LEO IVANOV	ANJANA KRISHNAN	MICHAEL ARTHUR	MICHAEL ARTHUR
REV 1	01/12/23	CONCEPT DESIGN FOR CLIENT REVIEW	HESHAN ATTANAYA	ANJANA KRISHNAN	ROPRU RANGSIVEK	MICHAEL ARTHUR

Project
WHANGAMATA STORMWATER IMPROVEMENTS

Location
WILLIAMSON ROAD / OCEAN ROAD

Title
COVER SLAB

Prepared by:
METIS

Client:
THAMES COROMANDEL DISTRICT COUNCIL

Drawing Number
12

Rev.
03

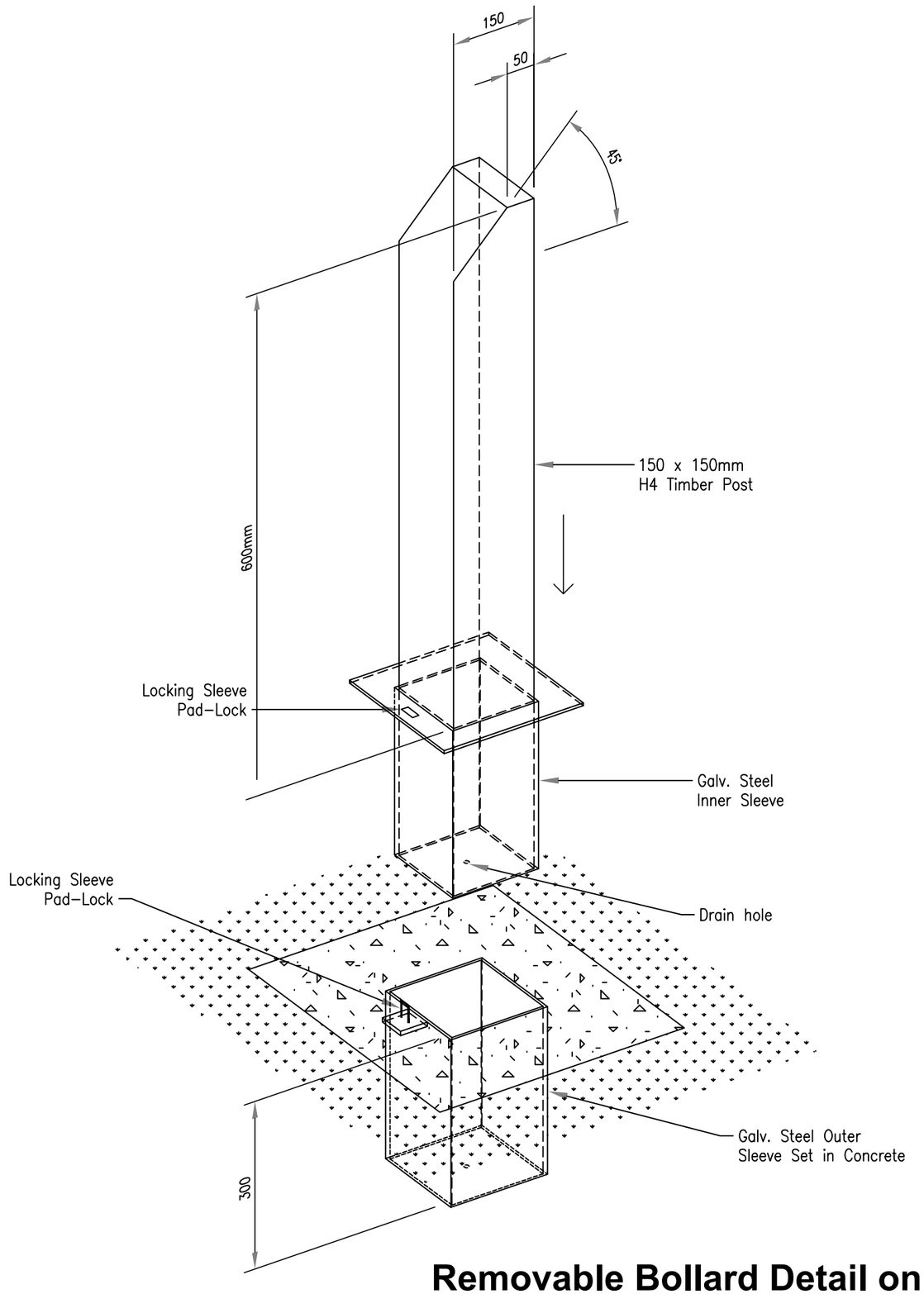

Removable Bollard Detail on the maintenance access

Legend



Notes:

1. All existing services shown are indicative only. The contractor is responsible for:
   - Confirming location and invert levels.
   - Exposing pipelines and services on site prior to commencing excavating works.
   - Drilling pile holes or driving piles to ensure the required clearances to services are achieved.

   Any discrepancies from issued plans should be notified to all parties immediately.
2. The contractor is responsible for protecting all existing services during construction. If damage occurs, the contractor shall reinstate the service at their own cost.
3. All services are to be located and flagged prior to commencing work on site.
4. Where new drainage pipes are shown to connect into existing, the contractor shall pothole and survey the top and the bottom of the pipe and confirm design levels with the engineer prior to construction.
5. Variations or discrepancies are to be referred to Metis Consultants for resolution prior to commencement.
6. The contractor shall carry out quality assurance testing as required by issued specifications and provide these progressively throughout the work and prior to completion.
7. Appropriate erosion and sediment control measures must be undertaken prior to any works commencing. These must be in accordance with local council requirements.
8. All works are to be conducted in line with TCDC Engineering Standards 2013.
9. All dimensions are in metres unless otherwise indicated.
10. Levels are in terms of NZVD2016.
11. Coordinates are in terms of NTZM projection NZGD2000.

Rev	Date	Purpose / Description	Drawn	Checked	Approved	Authorised
REV 3	15/04/24	DETAILED DESIGN FOR TENDER	LEO IVANOV	ANJANA KRISHNAN	MICHAEL ARTHUR	MICHAEL ARTHUR
REV 2	27/03/24	DETAILED DESIGN FOR TCDC REVIEW	LEO IVANOV	ANJANA KRISHNAN	MICHAEL ARTHUR	MICHAEL ARTHUR
REV 1	01/12/23	CONCEPT DESIGN FOR CLIENT REVIEW	HESHAN ATTANAYA	ANJANA KRISHNAN	ROPRU RANGSIVEK	MICHAEL ARTHUR

Project
WHANGAMATA STORMWATER IMPROVEMENTS

Location
WILLIAMSON ROAD / OCEAN ROAD

Title
BOLLARD

Prepared by:
METIS

Client:
THAMES COROMANDEL DISTRICT COUNCIL

Drawing Number
13

Rev.
03

Pen Table : METIS_A3 PLOT STYLE
Published by : leo ivanov
at : 4/16/2024 10:59 am
File name: WILLAMSON POND
A3

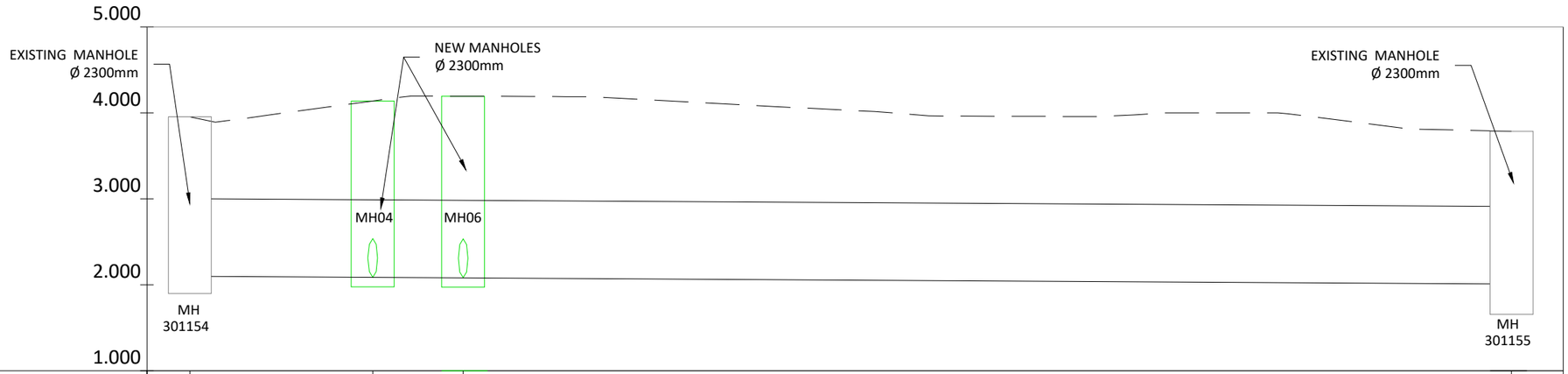
5.000
4.000
3.000
2.000
1.000
EXISTING MANHOLE
Ø 2300mm
NEW MANHOLES
Ø 2300mm
EXISTING MANHOLE
Ø 2300mm
MH04
MH06
MH
301154
MH
301155

| | | |

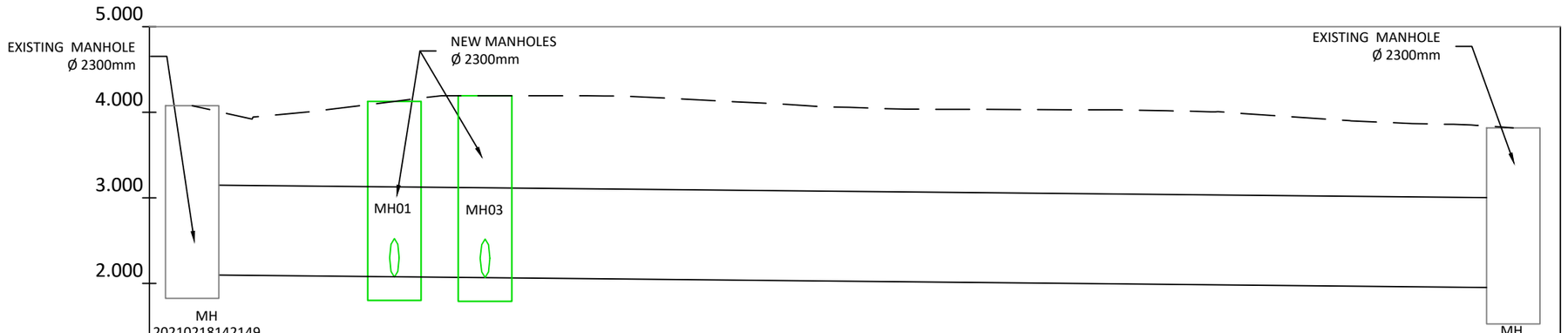

EXISTING LEVEL	4.08	4.13	4.19		3.82
CHAINAGE	0.000	9.462	13.703		61.801
INVERT LEVEL	2.100				1.950
DEPTH TO INVERT					1.95
PIPE DATA		1050Ø Reinforced Concrete 61.80m @ 0.24%			

EXISTING STORMWATER LONGSECTION Ø 1050mm

Legend



Notes:

1. All existing services shown are indicative only. The contractor is responsible for:
   - Confirming location and invert levels.
   - Exposing pipelines and services on site prior to commencing excavating works.
   - Drilling pile holes or driving piles to ensure the required clearances to services are achieved.

   Any discrepancies from issued plans should be notified to all parties immediately.
2. The contractor is responsible for protecting all existing services during construction. If damage occurs, the contractor shall reinstate the service at their own cost.
3. All services are to be located and flagged prior to commencing work on site.
4. Where new drainage pipes are shown to connect into existing, the contractor shall pothole and survey the top and the bottom of the pipe and confirm design levels with the engineer prior to construction.
5. Variations or discrepancies are to be referred to Metis Consultants for resolution prior to commencement.
6. The contractor shall carry out quality assurance testing as required by issued specifications and provide these progressively throughout the work and prior to completion.
7. Appropriate erosion and sediment control measures must be undertaken prior to any works commencing. These must be in accordance with local council requirements.
8. All works are to be conducted in line with TCDC Engineering Standards 2013.
9. All dimensions are in metres unless otherwise indicated.
10. Levels are in terms of NZVD2016.
11. Coordinates are in terms of NTZM projection NZGD2000.

Rev	Date	Purpose / Description	Drawn	Checked	Approved	Authorised
REV 3	15/04/24	DETAILED DESIGN FOR TENDER	LEO IVANOV	ANJANA KRISHNAN	MICHAEL ARTHUR	MICHAEL ARTHUR
REV 2	27/03/24	DETAILED DESIGN FOR TCDC REVIEW	LEO IVANOV	ANJANA KRISHNAN	MICHAEL ARTHUR	MICHAEL ARTHUR
REV 1	01/12/23	CONCEPT DESIGN FOR CLIENT REVIEW	HESHAN ATTANAYA	ANJANA KRISHNAN	ROPRU RANGSIVEK	MICHAEL ARTHUR

Project
WHANGAMATA STORMWATER IMPROVEMENTS

Location
WILLIAMSON ROAD / OCEAN ROAD

Title
STORMWATER LONG SECTION - EXISTING 2

Prepared by:
METIS

Client:
THAMES COROMANDEL DISTRICT COUNCIL

Drawing Number
15

Rev.
03

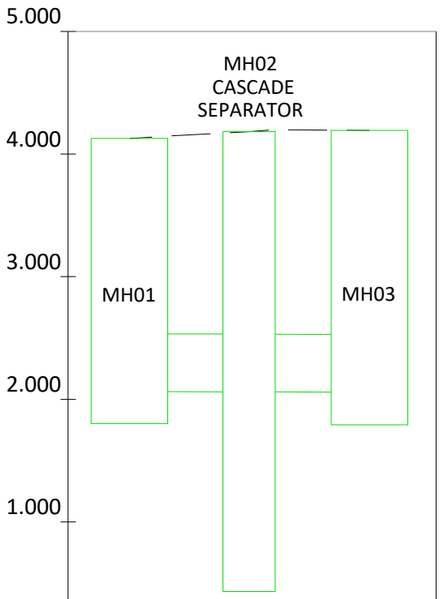

EXISTING LEVEL	4.13	4.18	4.19	
CHAINAGE	0.000	3.905	7.828	
INVERT LEVEL	2.074	2.072	2.072	2.069
DEPTH TO INVERT		2.07		2.07
PIPE DATA	450Ø PVC SN16 3.91m @ 0.06%			450Ø PVC SN16 3.92m @ 0.06%

PROPOSED STORMWATER LONGSECTION ON EXISTING SW NETWORK Ø 1050mm

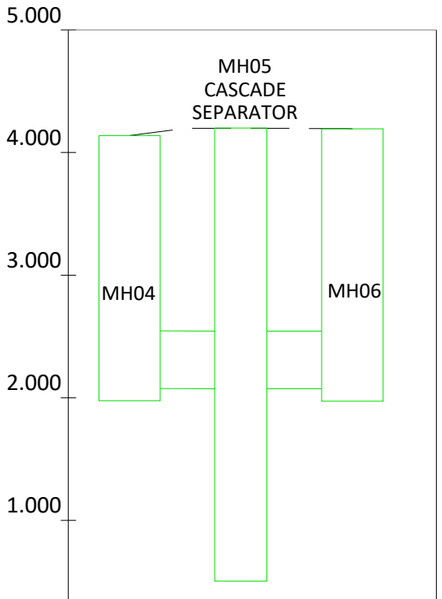

EXISTING LEVEL	4.14	4.20	4.19	
CHAINAGE	0.000	3.627	7.266	
INVERT LEVEL	2.086	2.084	2.084	2.083
DEPTH TO INVERT		2.08		2.08
PIPE DATA	450Ø PVC SN16 3.63m @ 0.04%			450Ø PVC SN16 3.64m @ 0.04%

PROPOSED STORMWATER LONGSECTION ON EXISTING SW NETWORK Ø 900mm

Legend



Notes:

1. All existing services shown are indicative only. The contractor is responsible for:
   - Confirming location and invert levels.
   - Exposing pipelines and services on site prior to commencing excavating works.
   - Drilling pile holes or driving piles to ensure the required clearances to services are achieved.

   Any discrepancies from issued plans should be notified to all parties immediately.
2. The contractor is responsible for protecting all existing services during construction. If damage occurs, the contractor shall reinstate the service at their own cost.
3. All services are to be located and flagged prior to commencing work on site.
4. Where new drainage pipes are shown to connect into existing, the contractor shall pothole and survey the top and the bottom of the pipe and confirm design levels with the engineer prior to construction.
5. Variations or discrepancies are to be referred to Metis Consultants for resolution prior to commencement.
6. The contractor shall carry out quality assurance testing as required by issued specifications and provide these progressively throughout the work and prior to completion.
7. Appropriate erosion and sediment control measures must be undertaken prior to any works commencing. These must be in accordance with local council requirements.
8. All works are to be conducted in line with TCDC Engineering Standards 2013.
9. All dimensions are in metres unless otherwise indicated.
10. Levels are in terms of NZVD2016.
11. Coordinates are in terms of NTZM projection NZGD2000.

Rev	Date	Purpose / Description	Drawn	Checked	Approved	Authorised
REV 3	15/04/24	DETAILED DESIGN FOR TENDER	LEO IVANOV	ANJANA KRISHNAN	MICHAEL ARTHUR	MICHAEL ARTHUR
REV 2	27/03/24	DETAILED DESIGN FOR TCDC REVIEW	LEO IVANOV	ANJANA KRISHNAN	MICHAEL ARTHUR	MICHAEL ARTHUR
REV 1	01/12/23	CONCEPT DESIGN FOR CLIENT REVIEW	HESHAN ATTANAYA	ANJANA KRISHNAN	ROPRU RANGSIVEK	MICHAEL ARTHUR

Project
WHANGAMATA STORMWATER IMPROVEMENTS

Location
WILLIAMSON ROAD / OCEAN ROAD

Title
STORMWATER LONG SECTION - PROPOSED 1

Prepared by:
METIS

Client:
THAMES COROMANDEL DISTRICT COUNCIL

Drawing Number
16

Rev.
03

Pen Table : METIS_A3 PLOT STYLE
Published by : leo ivanov
at : 4/16/2024 11:01 am
File name: WILLAMSON POND
A 3

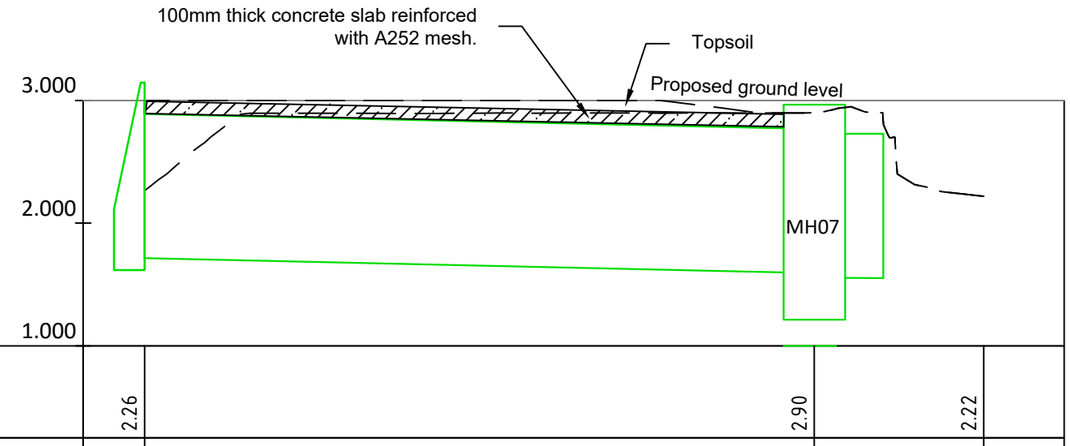

EXISTING LEVEL	2.26		2.90	2.22
CHAINAGE	0.000		21.849	27.374
PROPOSED GROUND LEVEL	2.871		2.899	2.218
INVERT LEVEL	1.890		1.767 / 1.730	1.728
DEPTH TO INVERT			1.77	1.73
PIPE DATA	825Ø Reinforced Concrete Class2 21.85m @ 0.56%		825Ø Reinforced Concrete Class2 2.24m @ 0.10%	

PROPOSED STORMWATER LONGSECTION Ø 825mm

Legend



Notes:

1. All existing services shown are indicative only. The contractor is responsible for:
   - Confirming location and invert levels.
   - Exposing pipelines and services on site prior to commencing excavating works.
   - Drilling pile holes or driving piles to ensure the required clearances to services are achieved.

   Any discrepancies from issued plans should be notified to all parties immediately.
2. The contractor is responsible for protecting all existing services during construction. If damage occurs, the contractor shall reinstate the service at their own cost.
3. All services are to be located and flagged prior to commencing work on site.
4. Where new drainage pipes are shown to connect into existing, the contractor shall pothole and survey the top and the bottom of the pipe and confirm design levels with the engineer prior to construction.
5. Variations or discrepancies are to be referred to Metis Consultants for resolution prior to commencement.
6. The contractor shall carry out quality assurance testing as required by issued specifications and provide these progressively throughout the work and prior to completion.
7. Appropriate erosion and sediment control measures must be undertaken prior to any works commencing. These must be in accordance with local council requirements.
8. All works are to be conducted in line with TCDC Engineering Standards 2013.
9. All dimensions are in metres unless otherwise indicated.
10. Levels are in terms of NZVD2016.
11. Coordinates are in terms of NTZM projection NZGD2000.

Rev	Date	Purpose / Description	Drawn	Checked	Approved	Authorised
REV 3	15/04/24	DETAILED DESIGN FOR TENDER	LEO IVANOV	ANJANA KRISHNAN	MICHAEL ARTHUR	MICHAEL ARTHUR
REV 2	27/03/24	DETAILED DESIGN FOR TCDC REVIEW	LEO IVANOV	ANJANA KRISHNAN	MICHAEL ARTHUR	MICHAEL ARTHUR
REV 1	01/12/23	CONCEPT DESIGN FOR CLIENT REVIEW	HESHAN ATTANAYA	ANJANA KRISHNAN	ROPRU RANGSIVEK	MICHAEL ARTHUR

Project
WHANGAMATA STORMWATER IMPROVEMENTS

Location
WILLIAMSON ROAD / OCEAN ROAD

Title
STORMWATER LONG SECTION - PROPOSED 2

Prepared by:
METIS

Client:
THAMES COROMANDEL DISTRICT COUNCIL

Drawing Number
17

Rev.
03

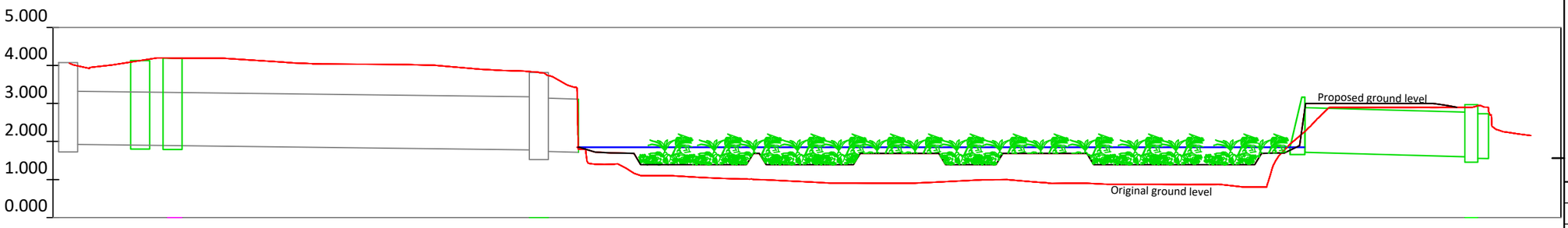

CHAINAGE	0.000	9.461	13.705	61.800	67.020	70.412	82.935	98.809	110.074	119.506	128.557	161.705	184.248	192.064

Long section Wetland

Legend



Notes:

1. All existing services shown are indicative only. The contractor is responsible for:
   - Confirming location and invert levels.
   - Exposing pipelines and services on site prior to commencing excavating works.
   - Drilling pile holes or driving piles to ensure the required clearances to services are achieved.

   Any discrepancies from issued plans should be notified to all parties immediately.
2. The contractor is responsible for protecting all existing services during construction. If damage occurs, the contractor shall reinstate the service at their own cost.
3. All services are to be located and flagged prior to commencing work on site.
4. Where new drainage pipes are shown to connect into existing, the contractor shall pothole and survey the top and the bottom of the pipe and confirm design levels with the engineer prior to construction.
5. Variations or discrepancies are to be referred to Metis Consultants for resolution prior to commencement.
6. The contractor shall carry out quality assurance testing as required by issued specifications and provide these progressively throughout the work and prior to completion.
7. Appropriate erosion and sediment control measures must be undertaken prior to any works commencing. These must be in accordance with local council requirements.
8. All works are to be conducted in line with TCDC Engineering Standards 2013.
9. All dimensions are in metres unless otherwise indicated.
10. Levels are in terms of NZVD2016.
11. Coordinates are in terms of NTZM projection NZGD2000.

Rev	Date	Purpose / Description	Drawn	Checked	Approved	Authorised
REV 3	15/04/24	DETAILED DESIGN FOR TENDER	LEO IVANOV	ANJANA KRISHNAN	MICHAEL ARTHUR	MICHAEL ARTHUR
REV 2	27/03/24	DETAILED DESIGN FOR TCDC REVIEW	LEO IVANOV	ANJANA KRISHNAN	MICHAEL ARTHUR	MICHAEL ARTHUR
REV 1	01/12/23	CONCEPT DESIGN FOR CLIENT REVIEW	HESHAN ATTANAYA	ANJANA KRISHNAN	ROPRU RANGSIVEK	MICHAEL ARTHUR

Project
WHANGAMATA STORMWATER IMPROVEMENTS

Location
WILLIAMSON ROAD / OCEAN ROAD

Title
WETLAND LONG SECTION

Prepared by:
METIS

Client:
THAMES COROMANDEL DISTRICT COUNCIL

Drawing Number 18

Rev. 03

Species	Common name	Percentage within wetland	Spacing	Pot size
Deep marsh zone				
Eleocharis sphacelata	Bamboo spike sedge	20%	1.5m oc	2L
Machaerina rubiginosa	Baumea	40%	0.75m oc	2L
Schoenoplectus tabernaemontani	Kāpūngāwhā/lake club rush	30%	0.5m oc	2L
Typha orientalis	Raupō	10%	2m oc	2L
Shallow marsh zone				
Bolboschoenus fluviatilis	Kukuraho / marsh club rush	15%	0.5m oc	2L
Carex virgata	Purei / makura	10%	0.5m oc	2L
Cyperus ustulatus	Giant umbrella sedge	10%	0.75m oc	2L
Eleocharis sphacelata	Bamboo spike sedge	10%	1.5m oc	2L
Machaerina rubiginosa	Baumea	25%	0.75m oc	2L
Phormium tenax	Harakeke	15%	1.5m oc	2L
Schoenoplectus tabernaemontani	Kāpūngāwhā/lake club rush	15%	0.5m oc	2L
Margin				
Carex maorica		10%	0.5m oc	2L
Carex subdola		10%	0.5m oc	2L
Coprosma propinqua	Mingimingi	15%	1.5m oc	2L
Cyperus ustulatus	Giant umbrella sedge	15%	0.75m oc	2L
Leptospermum scoparium	Manuka	20%	3m oc	2L
Machaerina tenax		10%	0.5m oc	2L
Phormium tenax	Harakeke	20%	1.5m oc	2L
Banks				
Austroderia fulvida	Toetoe	25%	1.5m oc	2L
Coprosma robusta	Karamu	15%	1.5m oc	2L
Cordyline australis	Cabbage tree	10%	2m oc	10L
Gahnia xanthocarpa	Māpere	15%	1.5m oc	2L
Hebe stricta	Koromiko	15%	2m oc	2L
Leptospermum scoparium	Manuka	20%	3m oc	2L

Deep marsh zone - 0.5m deep standing water

Shallow marsh zone - 0.2m deep standing water

Safety bench (Margin) - Temporarily flooded sides of the wetland

Banks - Rarely flooded, acts as physical vegetated barrier into wetland

Legend



Notes:

1. All existing services shown are indicative only. The contractor is responsible for:
   - Confirming location and invert levels.
   - Exposing pipelines and services on site prior to commencing excavating works.
   - Drilling pile holes or driving piles to ensure the required clearances to services are achieved.

   Any discrepancies from issued plans should be notified to all parties immediately.
2. The contractor is responsible for protecting all existing services during construction. If damage occurs, the contractor shall reinstate the service at their own cost.
3. All services are to be located and flagged prior to commencing work on site.
4. Where new drainage pipes are shown to connect into existing, the contractor shall pothole and survey the top and the bottom of the pipe and confirm design levels with the engineer prior to construction.
5. Variations or discrepancies are to be referred to Metis Consultants for resolution prior to commencement.
6. The contractor shall carry out quality assurance testing as required by issued specifications and provide these progressively throughout the work and prior to completion.
7. Appropriate erosion and sediment control measures must be undertaken prior to any works commencing. These must be in accordance with local council requirements.
8. All works are to be conducted in line with TCDC Engineering Standards 2013.
9. All dimensions are in metres unless otherwise indicated.
10. Levels are in terms of NZVD2016.
11. Coordinates are in terms of NTZM projection NZGD2000.

Rev	Date	Purpose / Description	Drawn	Checked	Approved	Authorised
REV 3	15/04/24	DETAILED DESIGN FOR TENDER	LEO IVANOV	ANJANA KRISHNAN	MICHAEL ARTHUR	MICHAEL ARTHUR
REV 2	27/03/24	DETAILED DESIGN FOR TCDC REVIEW	LEO IVANOV	ANJANA KRISHNAN	MICHAEL ARTHUR	MICHAEL ARTHUR
REV 1	01/12/23	CONCEPT DESIGN FOR CLIENT REVIEW	HESHAN ATTANAYA	ANJANA KRISHNAN	ROPRU RANGSIVEK	MICHAEL ARTHUR

Project

WHANGAMATA STORMWATER IMPROVEMENTS

Location

WILLIAMSON ROAD / OCEAN ROAD

Title

PLANTING PLAN

Prepared by:

METIS

Client:

THAMES COROMANDEL DISTRICT COUNCIL

Drawing Number

19

Rev.

03